WELD FOUR 800X514mm PLATE
WITH THE LADLE NUMBER.

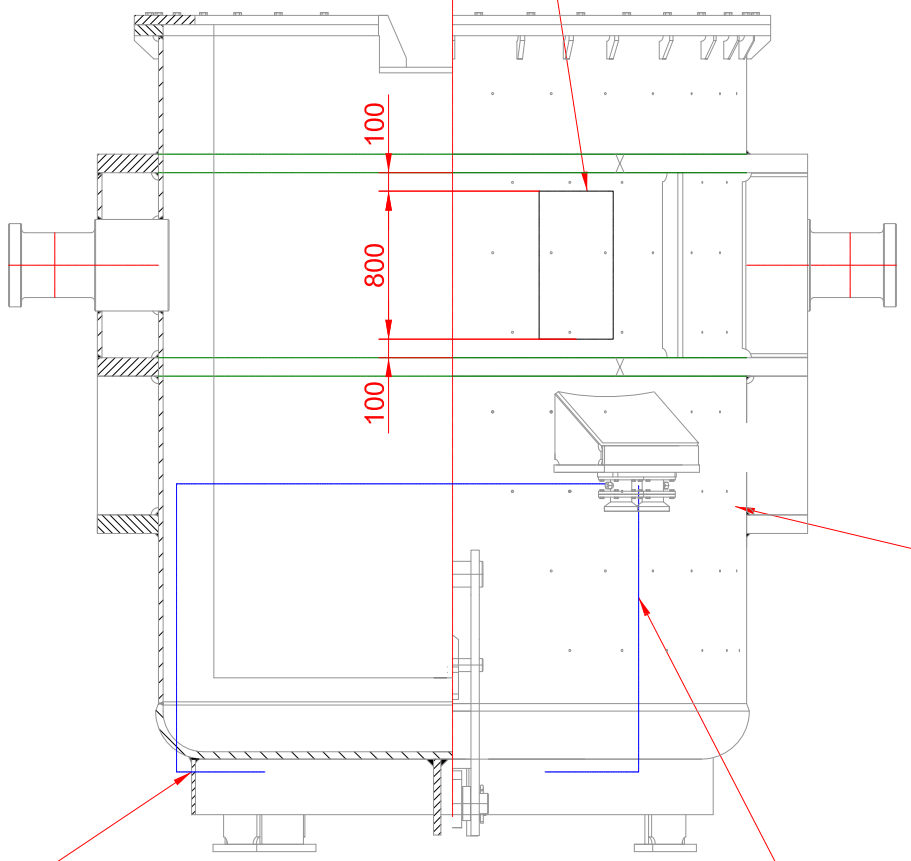

MAKE ∅30 HOLE
TO PASS THE PIPE

ARGON RUTE
ON THE LADLE

TYPYCAL DETAIL

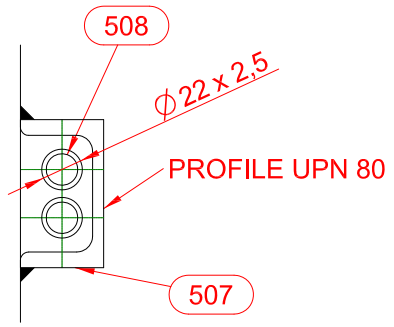

PIPES PROTECTION

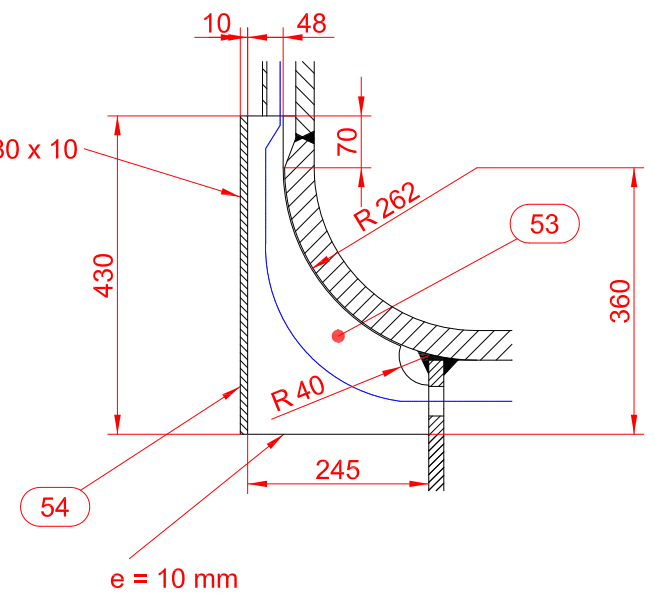

CONNECTION DETAIL

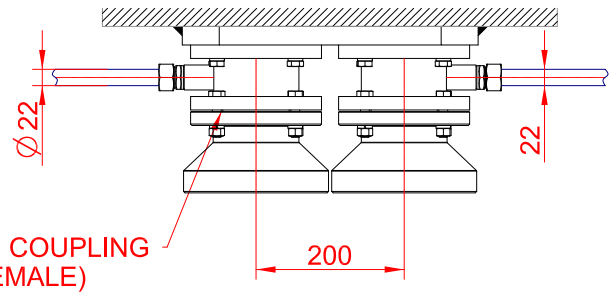

RAPID PIPE COUPLING
SYSTEM (FEMALE)

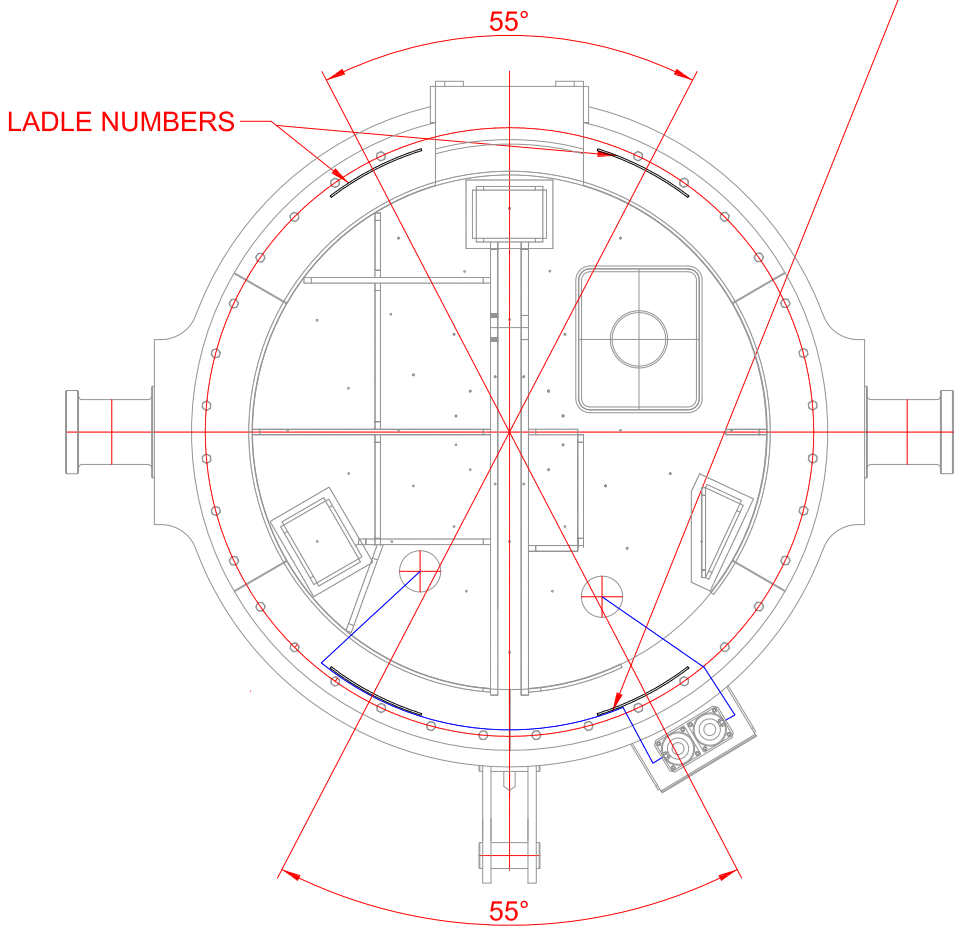

WELD THE LADLE NUMBER
TO EACH LADLE. 8 LADLES.

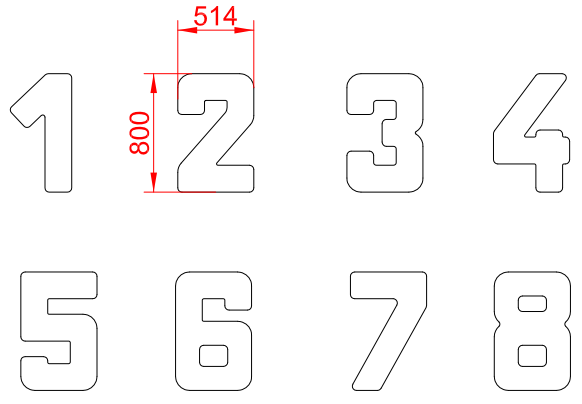

Rev.	Date	Revisions description	Drawn by	Verified by	Reviewed by
7	17/03/2016	UPDATED BUSH AND CONTROL PLAN.	A. Izaga 17/03/2016	M.A. Irlarte 17/03/2016	M.A. Irlarte 17/03/2016
6	17/04/2015	MODIFICATIONS ACCORDING TO EMAIL E0849	A. Eizagirre 17/04/2015	A. Eizagirre 17/04/2015	M.A. Irlarte 17/04/2015
5	07/01/2015	ADD GRAVITY CENTRE POINTS	I. Artola 07/01/2015	A. Eizagirre 07/01/2015	M.A. Irlarte 07/01/2015
4	18/11/2014	Lifting and supporting points changed.Slide gate,pourus plug and argon coupling moved.	A. Izaga 18/11/2014	A. Eizagirre 18/11/2014	M.A. Irlarte 18/11/2014
3	07/02/2014	DETAIL ENGINEERING	A. Izaga 07/02/2014	M.A. Irlarte 07/02/2014	M.A. Irlarte 07/02/2014
1	24/09/2013	First Issue	K. Amizabalaga 24/09/2013	A. Eizagirre 24/09/2013	M.A. Irlarte 24/09/2013

All welding not specified in the drawing with PW1, PW2 or SW1 are SW2 weldings acc. ES15013

The non dimensioned weldings will be welded with a = 0.5 x minimun thickness

Dimensions without indication are for information

Dimensions (xxxxx) to be controled acc. ISO 13920 grades C/E

Machined [xxxxx] to be controled acc. ISO 2768 grade m (machining) / c (oxi.cutting).

Control plan a/doc. 10423.9350.01.000 -CF.

IASCO
IRAN ALLOY STEEL CO.
YAZD - IRAN

APPROVED
(Stamp)

Owner Engineering
BARSOO ENG CO.

CONSORTIUM

Project Name
YAZD 1 STEEL MAKING PLANT

sarralle GROUP

Job nr SP10423
Obtained from
Replaces
Familly code/Machine code
Weight (Kg)
J (Kgm²)

4100 - AUX LADLE ASSEMBLY
100Tn LADLE ASSEMBLY
DETAILS

Scale 1:1
Format
Nr. of sheets 4
Sheet 4 Follow

SARRALLE Shop number 10423.4100.01.000-4 Revision 07

OWNER dwg number SP10423-GE11-M0100-SD002-07_003 Revision 07

SP10423-GE11-M0100-SD002-07_003

Documento nº20 Rev.7