Heat treatment	Annealing

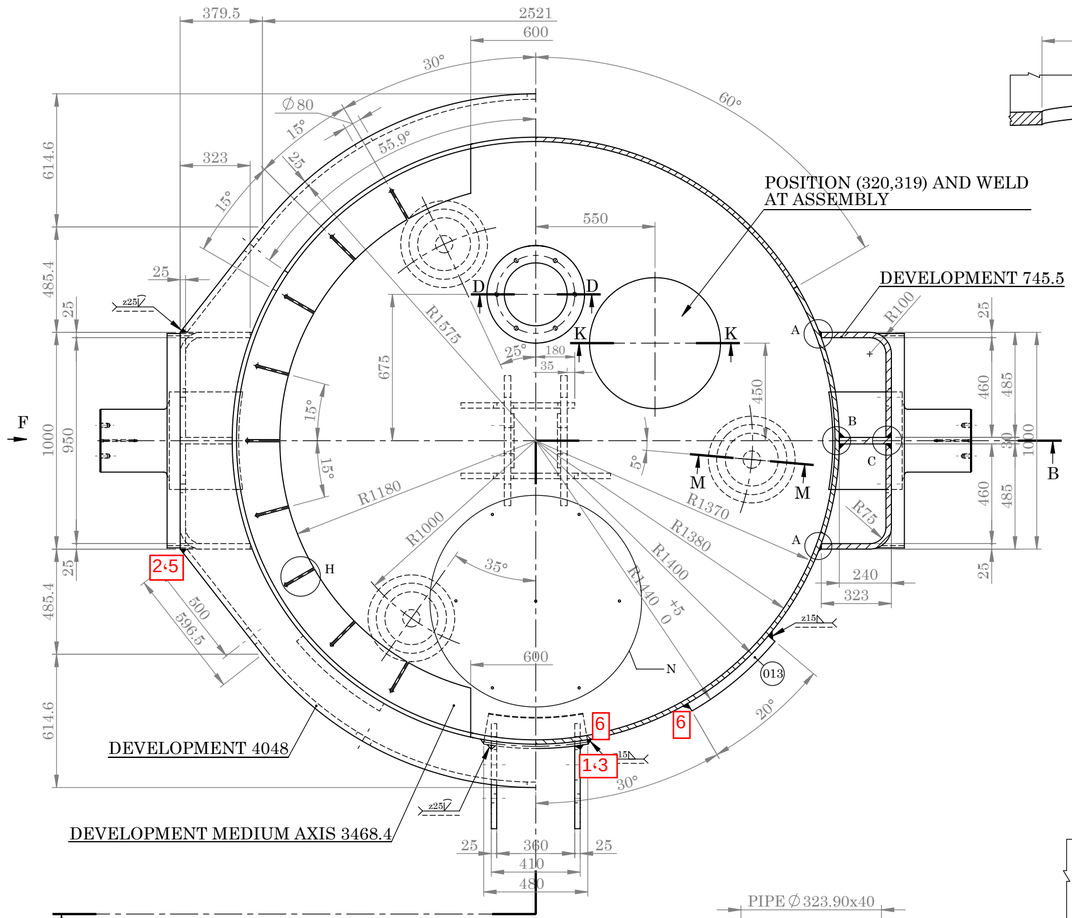

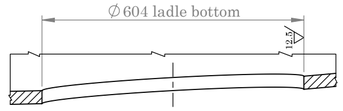

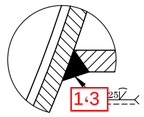

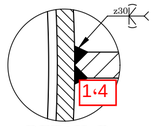

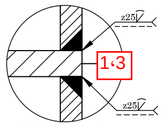

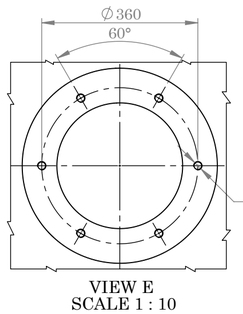

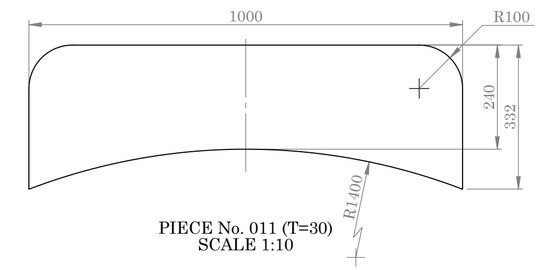

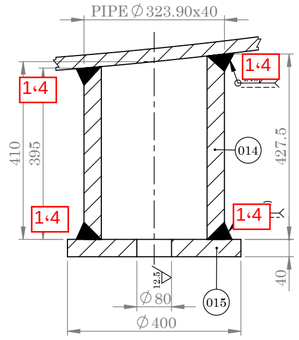

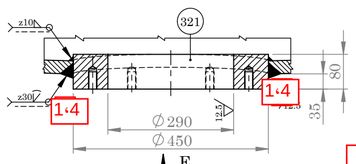

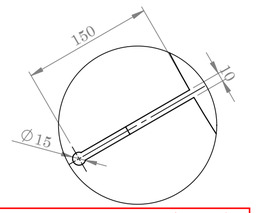

راهنما
ردیف جدول احاد بها

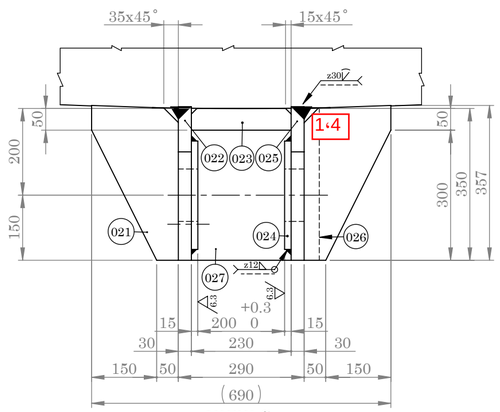

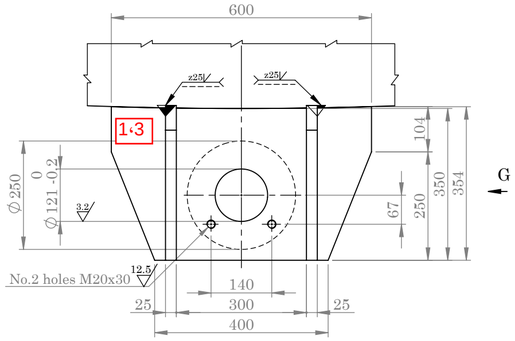

WELDING INSTRUCTIONS:
1-Heat the ladle bottom and the base to 150÷200 C° (302÷392 °F) important:this temperature must be maintained during the whole welding process.
2-Weld the root layer on one side,grind the other side of the root layer clean.
3-Apply root layer on other side.
4-Apply following layers alternating inside and outside.
5-It is recommended for a wall thickness of over 60mm to use for the first 2÷3 layers the following.

ELECTRODES: DIN 1913 E 4343 B10
ISO 2560 E 434 B20 (H)

NOTES:
-THE STEEL SHEETS OF THE ACTUAL BODY ARE TO BE 100% CHECKED WITH ULTRASONIC WAVES PREVIOUS TO THE ASSEMBLY AND MUST FALL IN CANDOR 2 OF THE UN 5329-63 STANDARDS.

-ALL WELDINGS MUST BE 100% CHECKED THROUGH WITH RADIOGRAPHIC INSPECTION (X-RAYS) AND ULTRASONIC WAVES CONTROL.

-THE ACCEPTABLE DEGREE OF THE WELDINGS MUST COMPLY WITH THE T GROUPINGS OF THE UN 7278-74 STANDARDS EVEN IF THIS STD CONCERNS ONLY THE DEGREES OF FAULTS IN THE HEAD TO HEAD WELDINGS IN REFERENCE TO THE X-RAYS CONTROL.

-THE WELDING PROCEDURE MUST BE QUALIFICATE ACCORDING TO THE STEEL OF THE LADLE BODY AND IT'S WORKING TEMPERATURE(400 °C).

-ALL WELDINGS MUST HAVE THE SAME CHARACTERISTICS OF THE BASIC MATERIAL.

-THE WELDINGS PROCEDURE CERTIFICATES AND WELDER'S QUALIFICATION MUST BE ENCLOSED.

-THE CASTING CERTIFICATE (CHEMICAL ANALYSIS) MUST BE ENCLOSED.

-THE MECHANICAL TESTING CERTIFICATES MUST BE ENCLOSED.

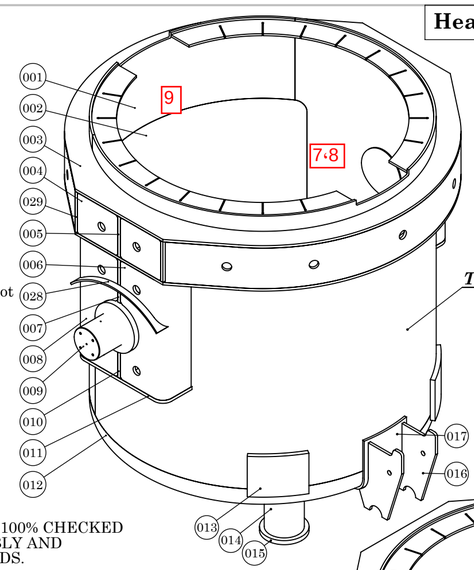

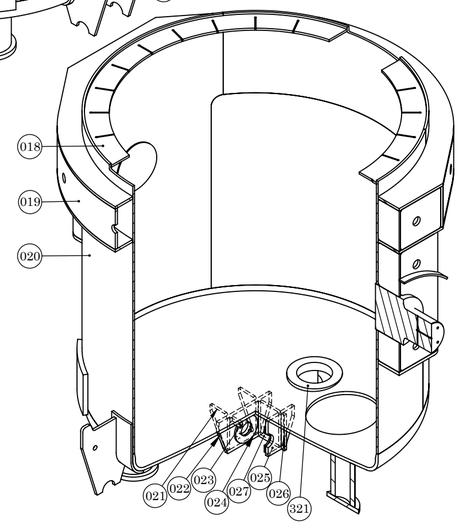

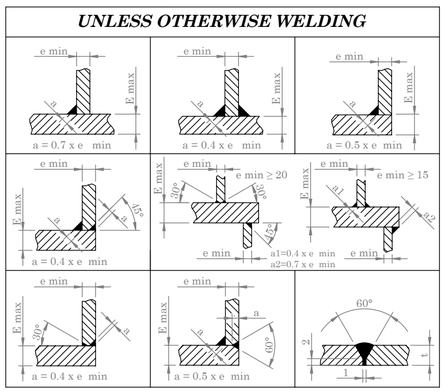

cutting line

(3.2 , 6.3 , 12.5 , 12.5)

POS	QTY	DESCRIPTION	MATERIAL	MASS (kg) UNIT	MASS (kg) TOTAL	DANIELI CODE	ASSY . CODE
029	04	PL 400x323x25	H II	-	-	-	4.280416.W
028	02	PL 1080.5x105.5x15	H II	-	-	-	4.280416.W
027	01	PL 350x230x25	H II	-	-	-	4.280416.W
026	02	PL 350x35x30	H II	-	-	-	4.280416.W
025	01	PL 600x354x30	H II	-	-	-	4.280416.W
024	02	PL ∅250x15	H II	-	-	-	4.280416.W
023	01	PL 230x50x25	H II	-	-	-	4.280416.W
022	01	PL 600x354x30	H II	-	-	-	4.280416.W
021	03	PL 357x200x25	H II	-	-	-	4.280416.W
020	01	PL 6022.42x2700x20	H II	-	-	-	4.280416.W
019	02	PL 4048x400x25	H II	-	-	-	4.280416.W
018	02	PL 3468.4x200x20	H II	-	-	-	4.280416.W
017	01	PL 599x482x20	H II	-	-	-	4.280416.W
016	02	PL 735x485x25	H II	-	-	-	4.280416.W
015	03	PL ∅400x40	H II	-	-	-	4.280416.W
014	03	PIPE ∅323.9x40,L:427.5	ST 55	-	-	-	4.280416.W
013	02	PL Lb:495.5,h:400,T:40	H II	-	-	-	4.280416.W
012	01	PL Lb:≈3075,T:30	H II	-	-	-	4.280416.W
011	02	PL 1000x332x30	H II	-	-	-	4.280416.W
010	02	PL 295x240x30	H II	-	-	-	4.280416.W
009	02	∅450x658.6	C 22	-	-	-	4.280416.W
008	02	PL 1170x745.5x25	H II	-	-	-	4.280416.W
007	02	PL 425x240x30	H II	-	-	-	4.280416.W
006	02	PL 1170x745.5x25	H II	-	-	-	4.280416.W
005	02	PL 400x240x30	H II	-	-	-	4.280416.W
004	04	PL 460x400x25	H II	-	-	-	4.280416.W
003	02	PL 3280x3200x25	H II	-	-	-	4.280416.W
002	01	PL 2911.21x1900x20	X10CrNiTi18-10	-	-	-	4.280416.W
001	01	PL 2711.21x800x20	H II	-	-	-	4.280416.W
321	01	POROUS PLUG	DWG	-	-	(BF50230.13)3009020019	4.280416.W
301	01	ASSEMBLY	-	9530	9530	4.280416.W	-

NOTE:
Dimension without tolerance follow: ISO 2768-M
MATERIAL:
H II DIN 17155,Fe 410-1 KW UNI 5869
C22 DIN 17200 , C20 TD3 UNI 7874
ST 55 DIN 1629

	NAME	DATE
DES.		
DRA.	M.H. Fesahat	92/02/23
CHK.	A.Alamdar	92/02/28
APPR.	M.Mirjalili	92/02/28

TITLE:
PLANT UNIT 03
LADLE BODY

IRAN ALLOY STEEL CO

ORDER.	RF6/4.C1	REF.DRAW	***SD1103T2901200301*** REV
CODE No.	4.280416.W	DWG No.	***FD1103T2901200301*** 00
QCTM No.	BF50230.1	SCALE: 1 : 20	SIZE: A2 SHEET: 1 OF 4

Heat treatment	Annealing

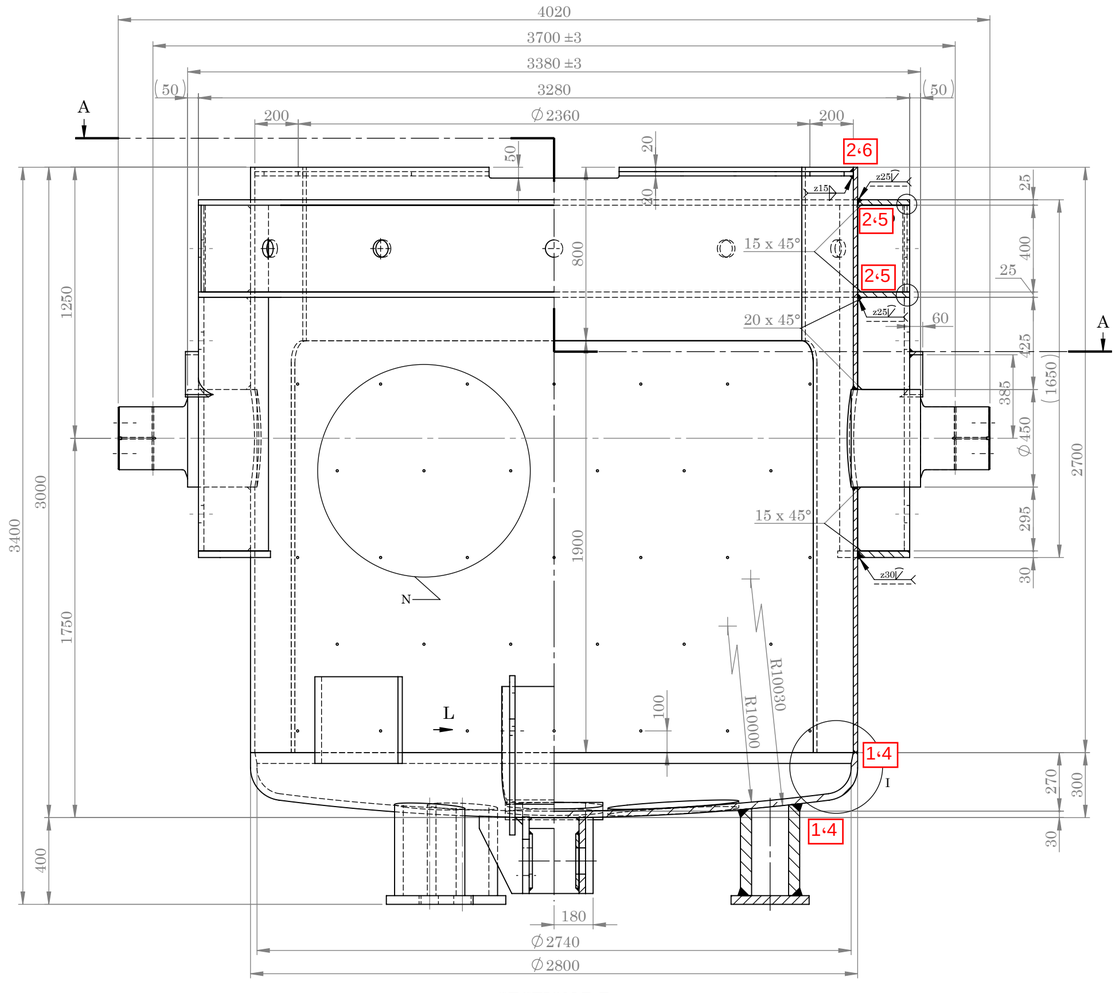

SECTION B-B
SCALE 1 : 20



طوقه بالاي پاتيل به
ضخامت ۴۰ ميلي‌متر
3803050013

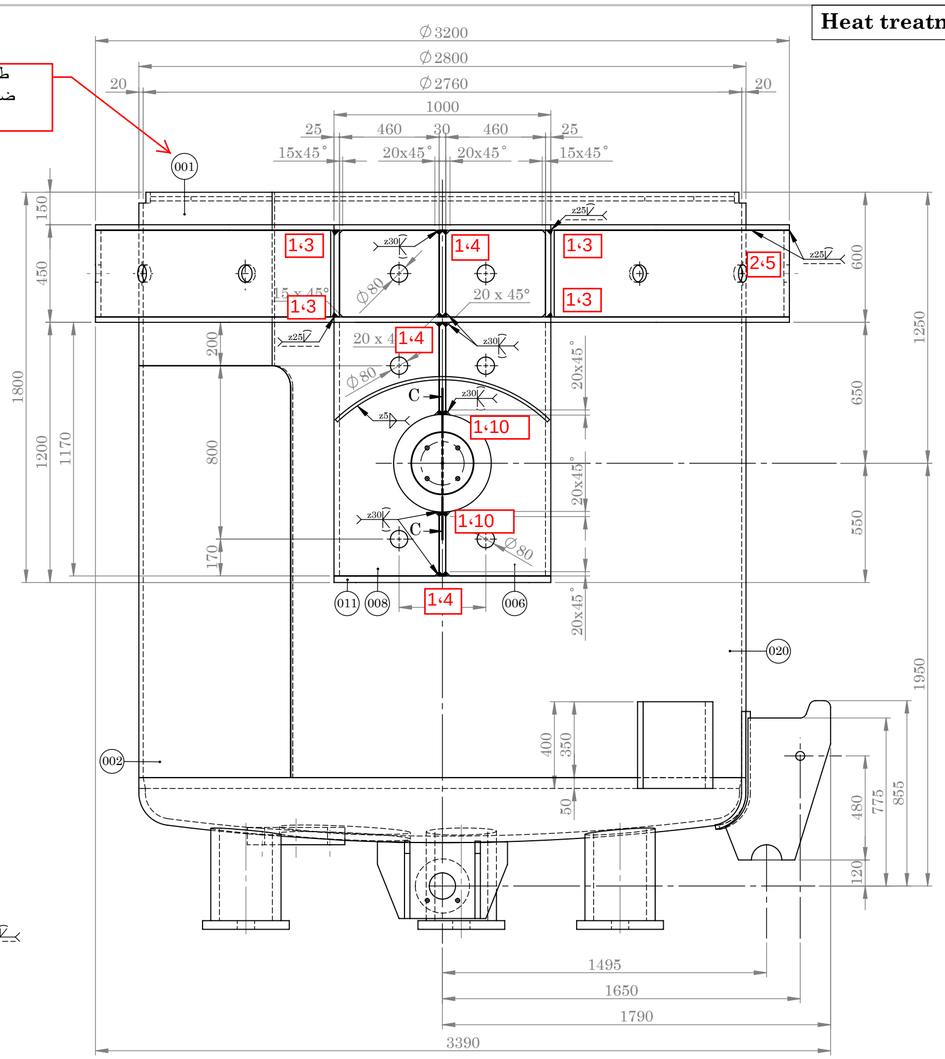

MATERIALE : C22 DIN 17200 , C20 TD3 UNI 7874

PREMACHINED FORGES
SUPPLY FORGINGS ACCORDING TO STD .2.9.004
ACCEPTABLE DEGREES:
OUTSIDE : 1/3 rd OF THICKNESS OF CATEGORY 2
INSIDE : NUT IN CATEGORY 3

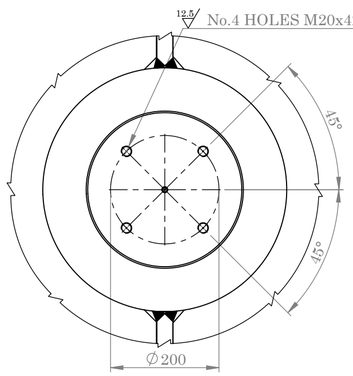

VIEW S
SCALE 1 : 8

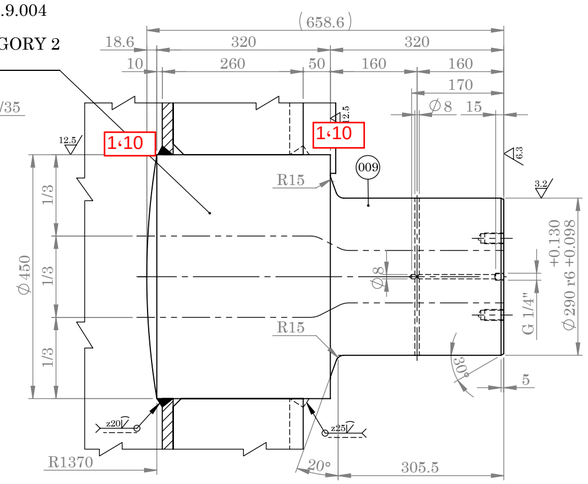

SECTION C-C
SCALE 1 : 8

DEVELOPMENT 599x482

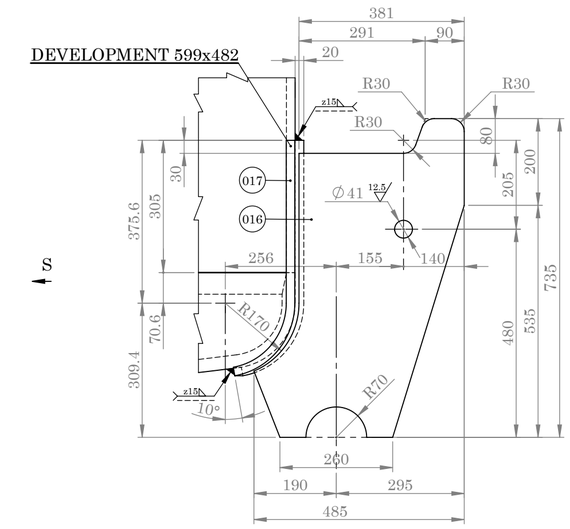

VIEW L
SCALE 1 : 10

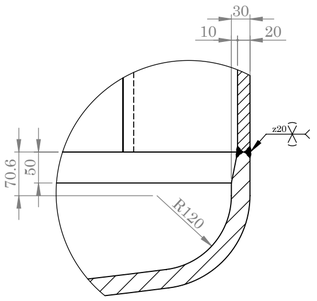

DETAIL I
SCALE 1 : 7

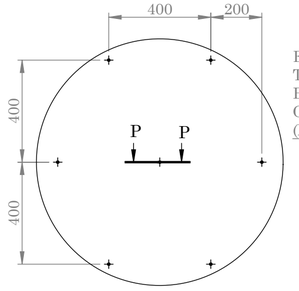

DETAIL N
SCALE 1 : 17

EXPANSION HOLES Ø10
TO CARRY ON ALL
BOTTOM SHELL AND
ON VERTICAL SURFACES
(MESH 400x400)

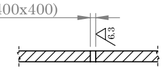

SECTION P-P
SCALE 1 : 8

cutting line

3.2	6.3	12.5	12.5

POS	QTY	DESCRIPTION	MATERIAL	UNIT MASS (kg)	TOTAL MASS (kg)	DANIELI CODE	ASSY . CODE
301	01	ASSEMBLY	H II , C22 , ST 55	9530	9530	4.280416.W	-

NOTE:
Dimension without tolerance follow:
ISO 2768-M
MATERIAL:
H II DIN 17155,Fe 410-1 KW UNI 5869
C22 DIN 17200 , C20 TD3 UNI 7874
ST 55 DIN 1629

	NAME	DATE
DES.		
DRA.	M.H.Fesahat	92/02/23
CHK.	A.Alamdar	92/02/28
APPR.	M.Mirjalili	92/02/28

TITLE:
PLANT UNIT 03
LADLE BODY

IRAN ALLOY STEEL CO

ORDER.	RF6/4.C1	REF.DRAW	***SD1103T2901200301*** REV
CODE No.	4.280416.W	DWG No.	***FD1103T2901200301*** 00
QCTM No.	BF50230.1	SCALE: 1 : 20	SIZE: A2 SHEET: 2 OF 4

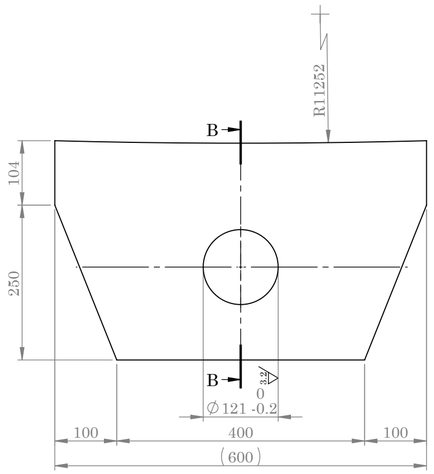

PIECE No. 025
SCALE 1:7

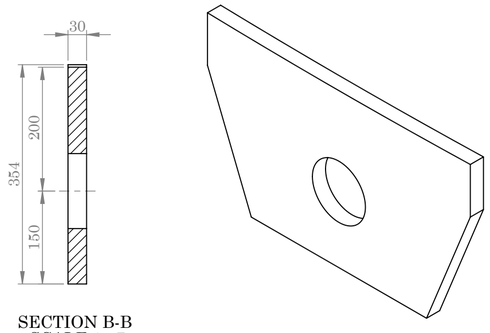

SECTION B-B
SCALE 1 : 7

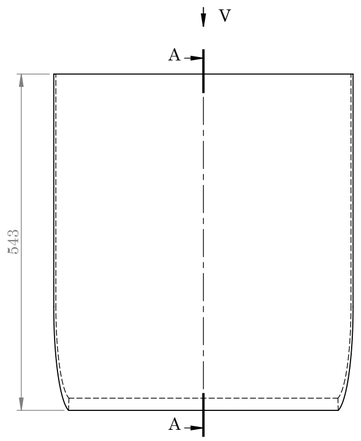

PIECE No. 017
SCALE 1:7

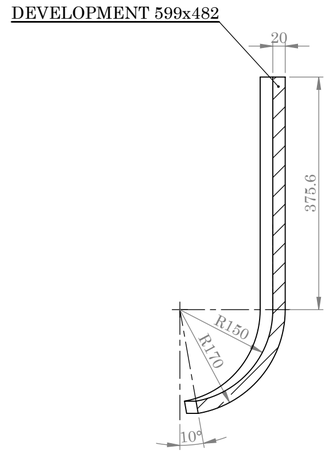

SECTION A-A
SCALE 1 : 7

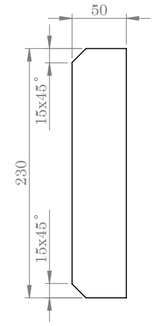

PIECE No. 023 T=25
SCALE 1:4

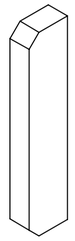

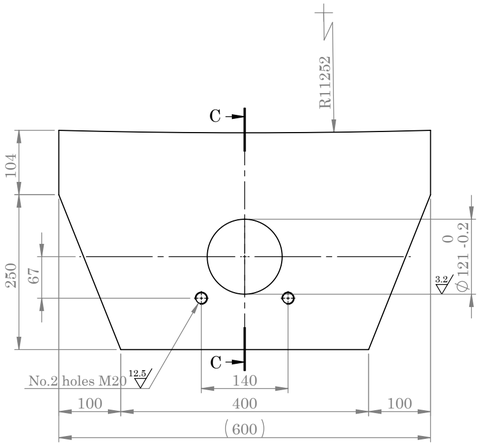

PIECE No. 022
SCALE 1:7

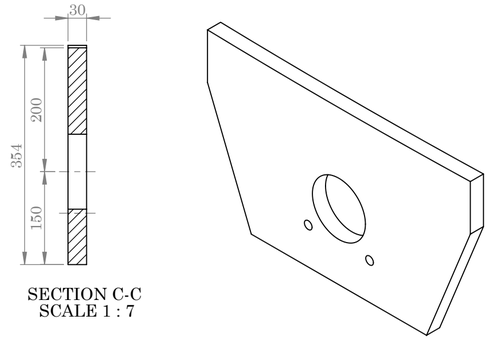

SECTION C-C
SCALE 1 : 7

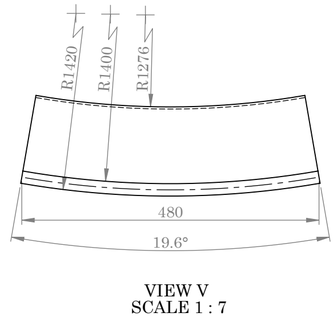

VIEW V
SCALE 1 : 7

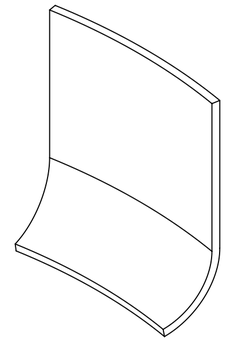

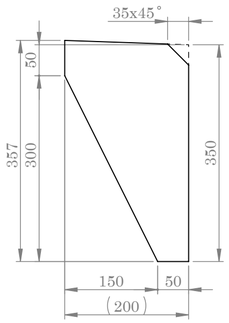

PIECE No. 021 T=25
SCALE 1:7

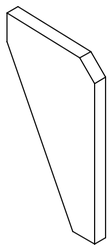

H

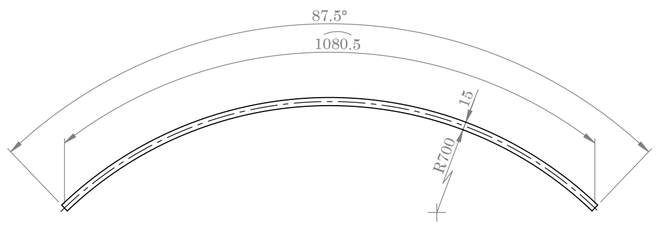

PIECE No.028
SCALE 1 : 8



(DEVELOPMENT) VIEW H
SCALE 1 : 8

cutting line

3.2 (, 12.5 , 12.5)

POS	QTY	DESCRIPTION	MATERIAL	MASS (kg) UNIT	MASS (kg) TOTAL	DANIELI CODE	ASSY . CODE
028	02	PL 1080.5x105.5x15	H II	-	-	-	4.280416.W
025	01	PL 600x354x30	H II	-	-	-	4.280416.W
023	01	PL 230x50x25	H II	-	-	-	4.280416.W
022	01	PL 600x354x30	H II	-	-	-	4.280416.W
021	03	PL 357x200x25	H II	-	-	-	4.280416.W
017	01	PL 599x482x20	H II	-	-	-	4.280416.W
301	01	ASSEMBLY	-	9530	9530	4.280416.W	-

NOTE:
Dimension without tolerance follow:
ISO 2768-M
MATERIAL:
H II DIN 17155
Fe 410-1 KW UNI 5869

	NAME	DATE
DES.		
DRA.	M.H.Fesahat	92/02/23
CHK.	A.Alamdar	92/02/28
APPR.	M.Mirjalili	92/02/28

TITLE:
PLANT UNIT 03
LADLE BODY

IRAN ALLOY STEEL CO

ORDER.	RF6/4.C1	REF.DRAW	***SD1103T2901200301*** REV
CODE No.	4.280416.W	DWG No.	***FD1103T2901200301*** 00
QCTM No.	BF50230.1	SCALE: - : -	SIZE: A2 SHEET: 4 OF 4